GrazeFall 2" Lensed Wall Grazer (55mm)

Formerly 801 and 805

Recessed Narrow Aperture Linear Wall Grazer

PROJECT:	TYPE:

SPECIFIER:	DATE:

The GrazeFall Family

Welcome to GrazeFall, our family of premier linear wall grazers for highlighting beautiful materials and feature walls, revealing textures by contrasting light and shadow. This high performance 2" (55mm) lensed wall grazer is intended for walls up to 15 feet high and can be installed in the ceiling or in the floor as an uplight grazer. The continuous system can be specified to custom lengths at 6" increments with the option of flush or regressed lensed positions and a choices of flanged or flangeless trims in the ceilings. The narrow profile fixture is ideally suited to highlight the texture in surfaces such as stucco or brick, illuminate flat surfaces such as venetian plaster, wood, or specular surfaces such as polished stone or stainless steel. The 2" GrazeFall family has additional product offerings, including baffled fixtures and wall mounted surface fixtures.

Flush Lens Recessed (FL)

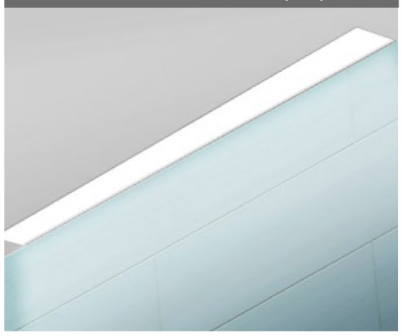

Regress Lens (RL)

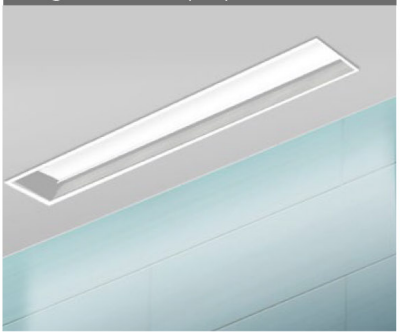

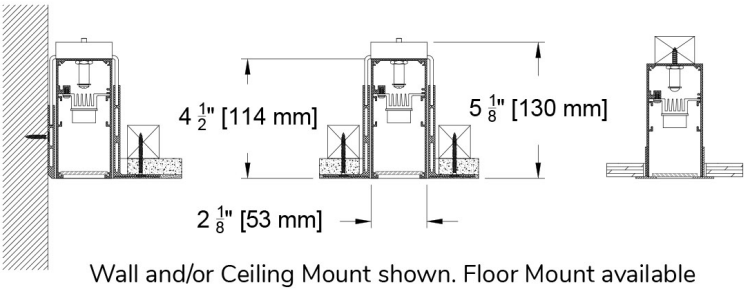

Wall and/or Ceiling Mount shown. Floor Mount available

Key Points (GZ2L-RM)

Trim

- 15 color options + Custom and RAL# available.
- Sealed walk-over lens for interior up-light applications.
- Shower Trim is fully sealed and gasketed.
- Flanged or Flangeless.

Source Optics

- Up to 608 lm/ft available in static white.
- 90+ CRI and 60+ R9 for static white.
- CCT offerings - 2700k, 3000k, 3500k and 4000k.
- Dynamic tunable white in two ranges: 1800-4000k and 2700-6500k.
- RGBW available with DMX control.
- Veiling Acrylic lens standard - other lens types available.

Housing

- Inside and outside 'L' configurations are available for corners and wrap arounds.
- Recessed ceiling or floor mounting.
- Damp listed - Wet listed with Shower Trim or IH (up-light) housing.
- 6" specification increments (Integral Driver requires minimum of 2' and may influence 6" specification increment)

Driver And Control

- 1% dimming standard - 0.1% available.
- 0-10v, DALI-2, Lutron Ecosystem, EldoLED and DMX options available.
- Flicker Free to IEEE 1789-2015.
- Universal 120v to 277v.

Aperture and Mounting Options

Flush Lens Recessed (FL)
Formerly 801-LED-PH/FH

Flush Lens Up Light (FL)
Formerly 801-LED-IH

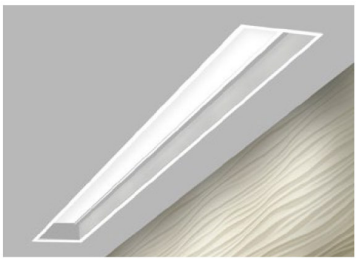

Regress Lens (RL)
Formerly 805-LED-PH/FH

InRelief 2" Lensed			18° x 50°				Asymetric ISO CD Plot		
Lens Type	Source	System watts (W/ft)	Delivered Lumens (lm/ft)	Lumens/ Watt	Peak CD	10% Field	18° across width x 50° along run	CCT Multiplier	
Flush Lens (FL)	SNL8 (800/801)	8	462	55	724	78°	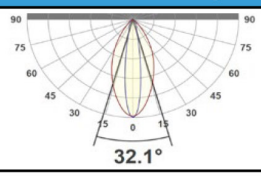	2700	0.9
	SNL11	11	608	53	953	78°		3000	1
Regress Lens (RL)	SNL8	8	454	54	733	78°		3500	1
	SNL11	11	598	52	962	78°			

© 2026 Specialty Lighting Industries
These specifications are subject to change without notice.
Specialty Lighting Industries
1306 Doris Ave., Ocean, NJ 07712
Tel. 732.517.0800 | Fax 732.517.0971

Ordering Codes

PROJECT:

SPECIFIER:

DATE:

TYPE:

QUANTITY:

Ordering Code Example: GZ2L-RM-RL-Z-3U-102"-SNL11-30-SY1-P24-79A-ST

FIXTURE	APERTURE	TRIM	MOUNTING	LENGTH	LUMENS / WATTS	CCT	DRIVER / CONTROL	HOUSING FINISH	LENS ACCESSORIES	ACCESSORIES
GZ2L-RM										
GrazeFall 2" Linear Lensed Wall Grazer	FL Flush Lens RL Regressed Lens	F Flanged Trim Z Flangeless Trim	**Flanged Housings** FH ● ● Flanged Housing **Flangeless Housings** IH ● ● Up-light always flangeless to be flush with floor 1U ● ● 1 sided plaster flange for Wall-Ceiling Mount where fixture has wall on 3 sides 3U ● ● 3 sided plaster flange for Wall-Ceiling Mount where fixture has wall on 1 sides 4U ● ● 4 sided plaster flange for recessed ceiling mount Note - All housings are airtight by design ● ● CA Title 24 Compliant to JA8	__ Specify in inches exact length in increments of 6" minimum and 24" minimum with integral driver	SNL8 ● ● 8W/ft 462Lm/ft** 90+CRI, 60+R9 Specialty Board* SNL11 ● ● 11W/ft 608Lm/ft** 90+CRI, 60+R9 Specialty Board* **Tunable** TWSL10 11W/ft 1300Lm/ft (source lumens at mid CCT range) 90+CRI, 60+R9 Specialty Tunable White Board + RGBWSL18 18W/ft 1000Lm/ft (source lumens) 90+CRI, 60+R9 Specialty RGBW Color Tunable Board ++ * Rigid Linear board with 2W capable LEDs, 50mm OC with collimating optic ** Based on Flush Lens Aperture. + Rigid Linear tunable white board with 3.3W capable LEDs, 50mm OC with 30° optic (must specify CCT range and E22 Tunable White) ++ Rigid Linear RGBW color tunable board with 5W capable LEDs, 50mm OC with 30° optic (must specify with DMX driver option) ● ● CA Title 24 Compliant to JA8	27 2700K 30 3000K 35 3500K 40 4000K **Tunable** 1840 1800-4000K Tunable White 2765 2700-6500K Tunable White RGBW 1200-8000K Dynamic Color Changing	SY1 0-10 1.0%, UNV (120-277V) linear E1 0-10 0.1%, UNV (120-277V) log E2 DALI-2 0.1%, UNV (120-277V) log E3 0-10 0.1%, UNV (120-277V) linear SY2 0-10 1.0%, UNV (120-277V) log **Lutron** LD Digital Ecosystem* 1.0%, UNV (120-277V) ECO Hi-Lume SoftOn/Fade-to-Black LDE1 **EldoLED** E22 0-10* 0.1%, UNV (120-277V) log 2 Channel for Tunable White **Tunable** RGBW-DMX DMX 0.1%, UNV (120-277V) Universal DMX Driver/Controller	W White Paint B Black Paint PXX Specialty Paint Color* P01-P15 C Custom/RAL* *See Finish Guide Note: Flanged Trim can have alternative finish - contact factory if desired FINISH GUIDE LINK	**Aperture Lens** 79A Veiling Acrylic 91A Solite **Walk Over Lens** CP84 Residential Clear SP84 Frosted Note: Use walk over lens selections with IH - up-light housing	CP Chicago Plenum ST Shower Trim LC Lens Clip BABA BABA Compliant BABA Products IS9X Inside 90° Corner* CA Casambi Wireless BLE to be paired with driver OS9X Outside 90° Corner* **Controls** LR Lutron Wireless RF PowPak ATH Lutron Athena Wireless Node *Must be used with E2 driver* *X=specify number of corners

© 2026 Specialty Lighting Industries
These specifications are subject to change without notice.
Specialty Lighting Industries
1306 Doris Ave., Ocean, NJ 07712
Tel. 732.517.0800 | Fax 732.517.0971

Ceiling Cutouts and Dimensions

To achieve best results, Specialty recommends to mount the fixture as close to the wall as possible. All drawings show closest possible mounting condition. Ceiling blocking is required and shown with a "X" in a box as a reference. Blocking will vary based on construction conditions and should be detailed on submittal drawings to define construction method and final wall offsets.

GZ2L- Recessed Flush Lens Flanged Housing FL-FH

(GZ2L-FL-F-FH-)

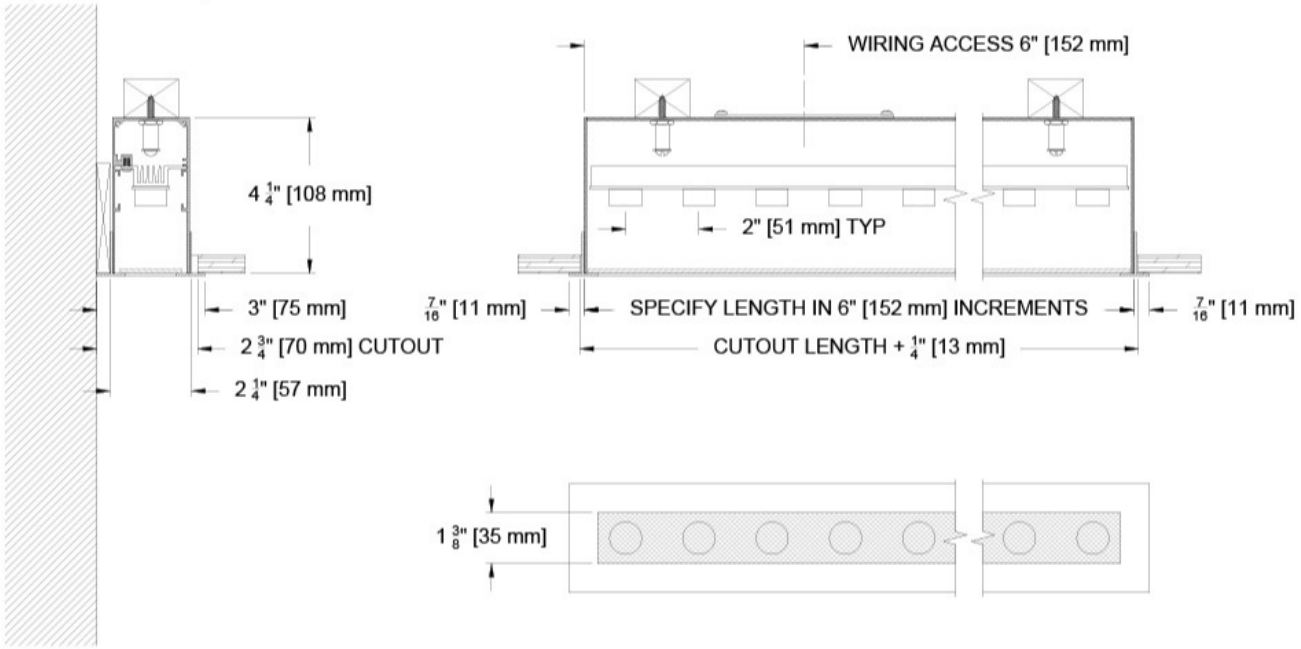

GZ2L- Regressed Lens Flanged Housing RL-FH

(GZ2L-RL-F-FH-)

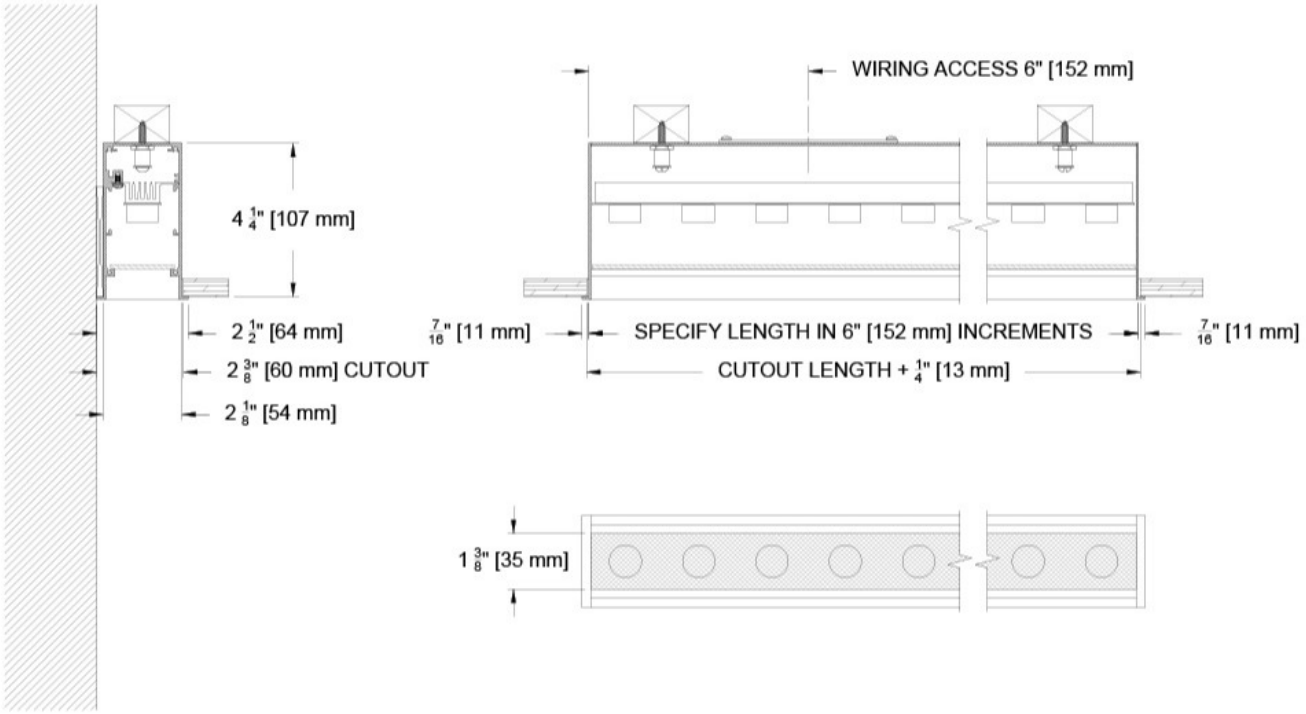

© 2026 Specialty Lighting Industries
These specifications are subject to change without notice.
Specialty Lighting Industries
1306 Doris Ave., Ocean, NJ 07712
Tel. 732.517.0800 | Fax 732.517.0971

Ceiling Cutouts and Dimensions

GZ2L- Recessed Flush Lens 3 Sided with Wall Mount FL-3U

(GZ2L-FL-Z-3U-)

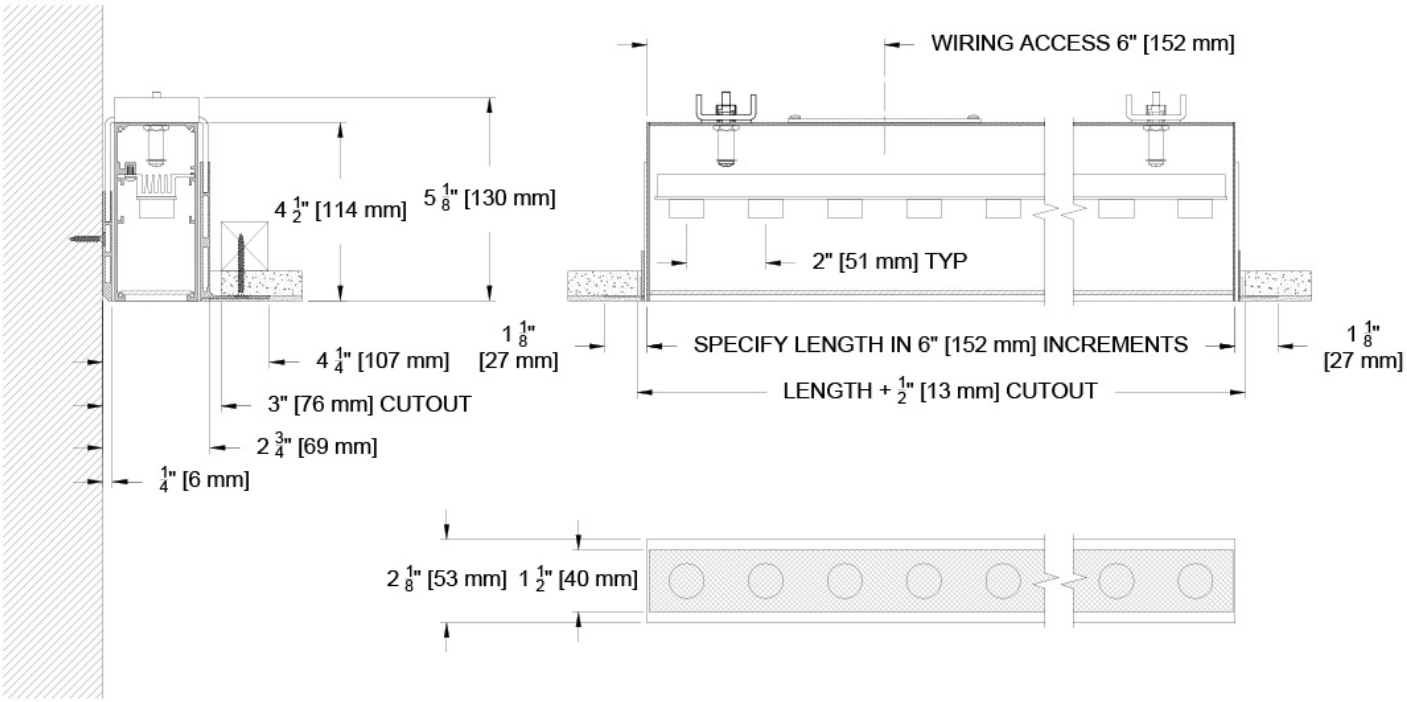

GZ2L- Recessed Flush Lens 4 Sided Plaster Flange FL-4U

(GZ2L-FL-Z-4U-)

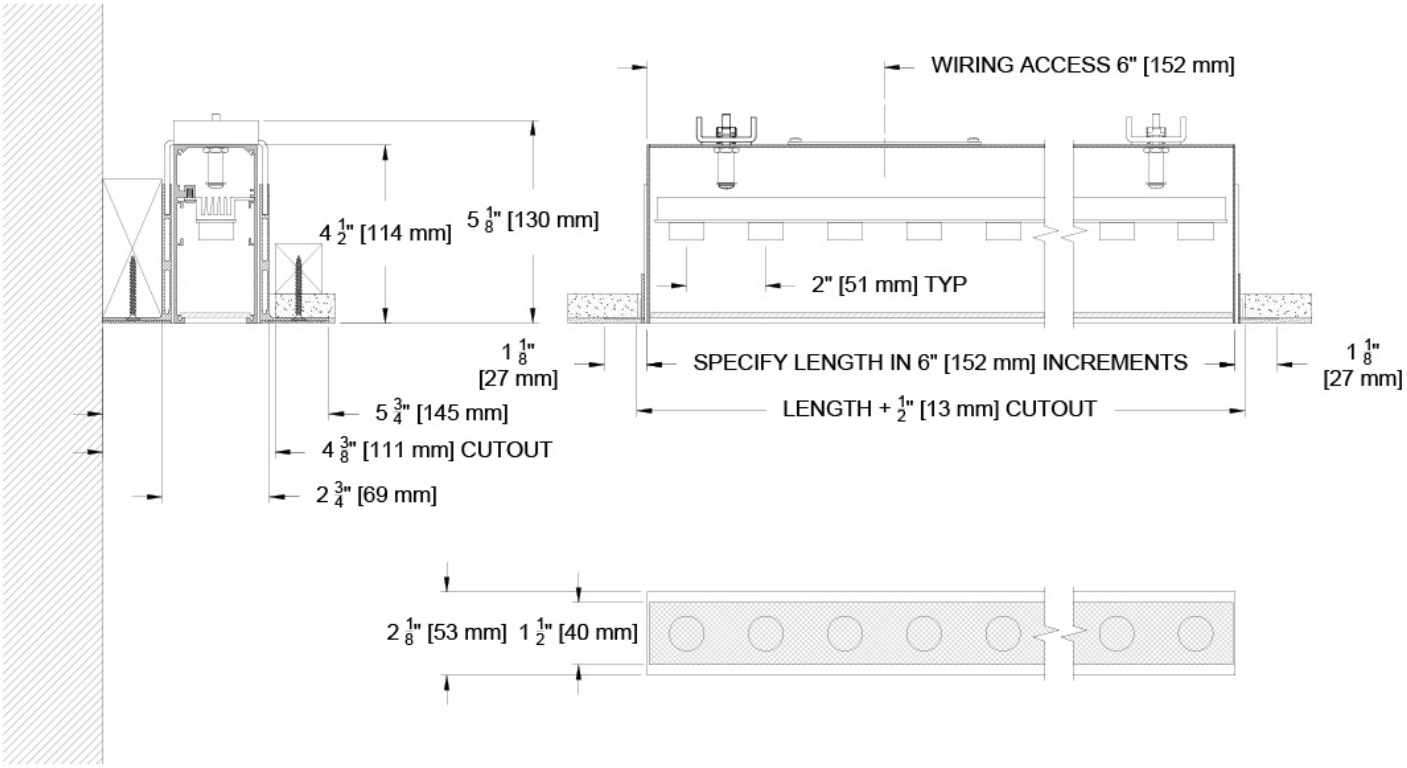

© 2026 Specialty Lighting Industries
These specifications are subject to change without notice.
Specialty Lighting Industries
1306 Doris Ave., Ocean, NJ 07712
Tel. 732.517.0800 | Fax 732.517.0971

Ceiling Cutouts and Dimensions

GZ2L- Regressed Lens 3 Sided with Wall Mount RL-3U

(GZ2L-RL-Z-3U-)

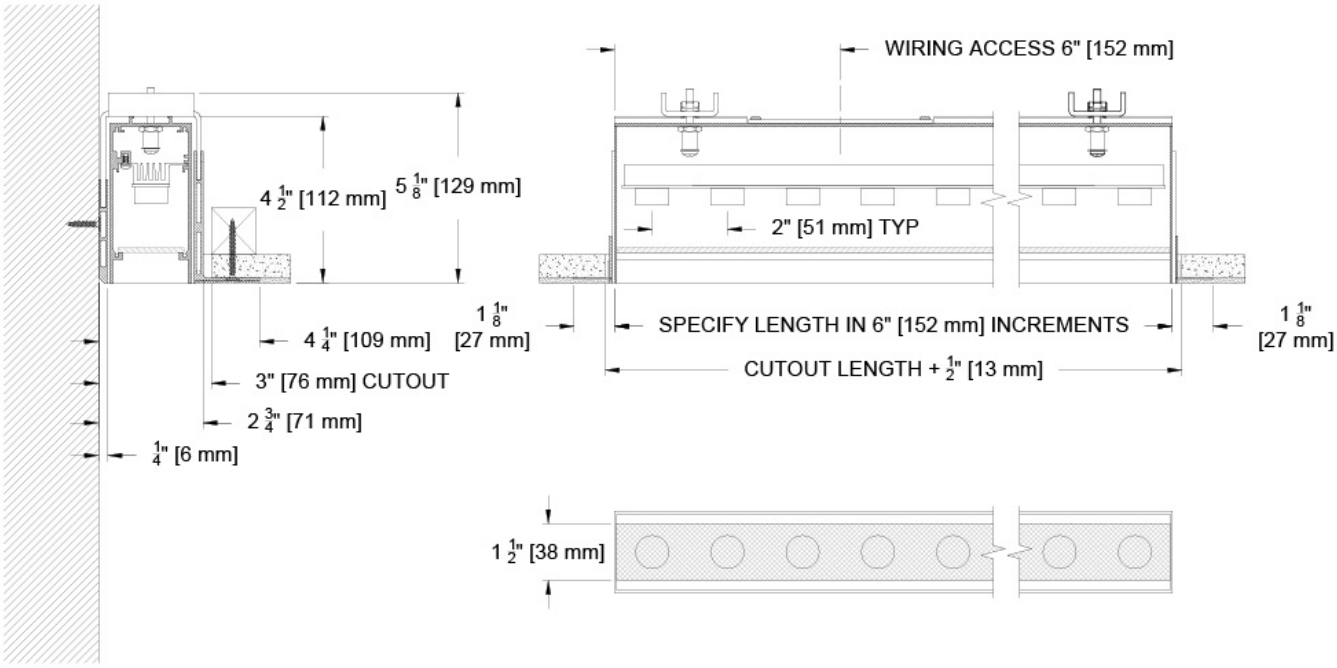

GZ2L- Regressed Lens 4 Sided Plaster Flange RL-4U

(GZ2L-RL-Z-4U-)

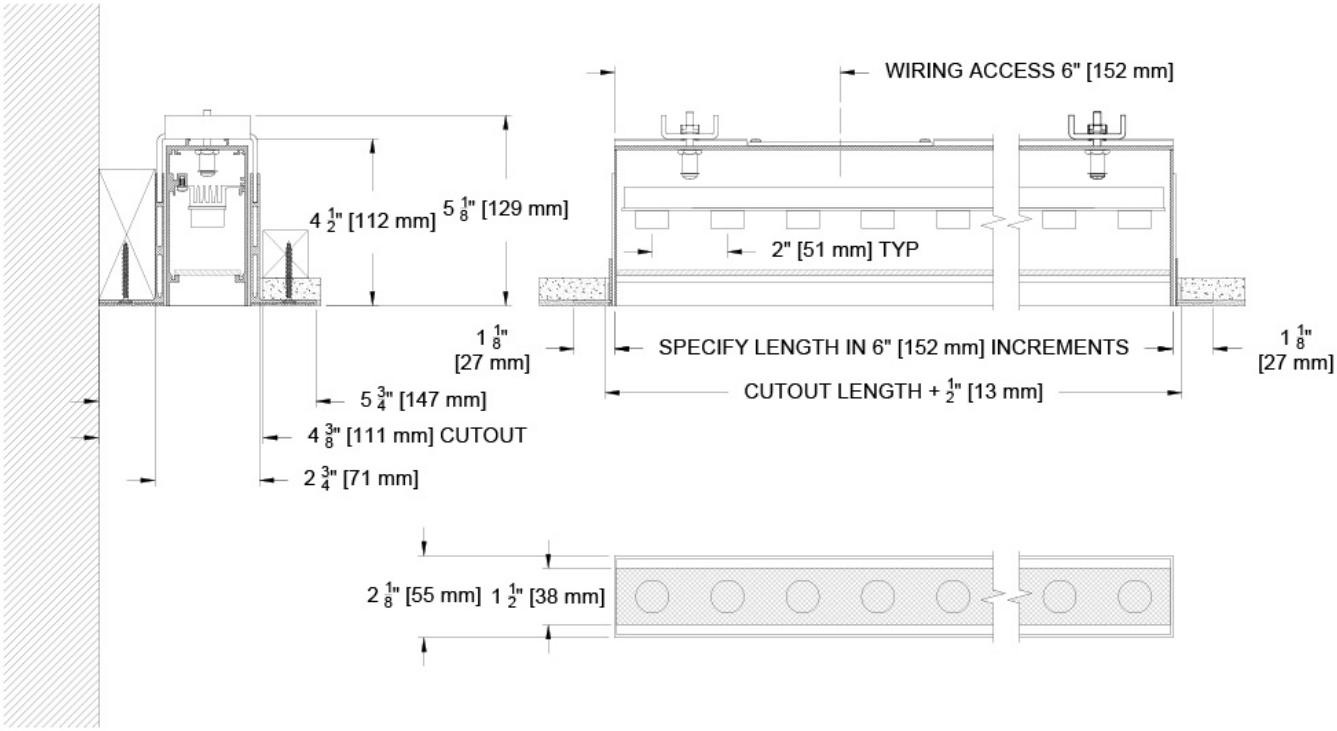

© 2026 Specialty Lighting Industries
These specifications are subject to change without notice.
Specialty Lighting Industries
1306 Doris Ave., Ocean, NJ 07712
Tel. 732.517.0800 | Fax 732.517.0971

Ceiling Cutouts and Dimensions

GZ2L- Flush Lens In Floor Housing FL-IH

(GZ2L-FL-Z-IH-)

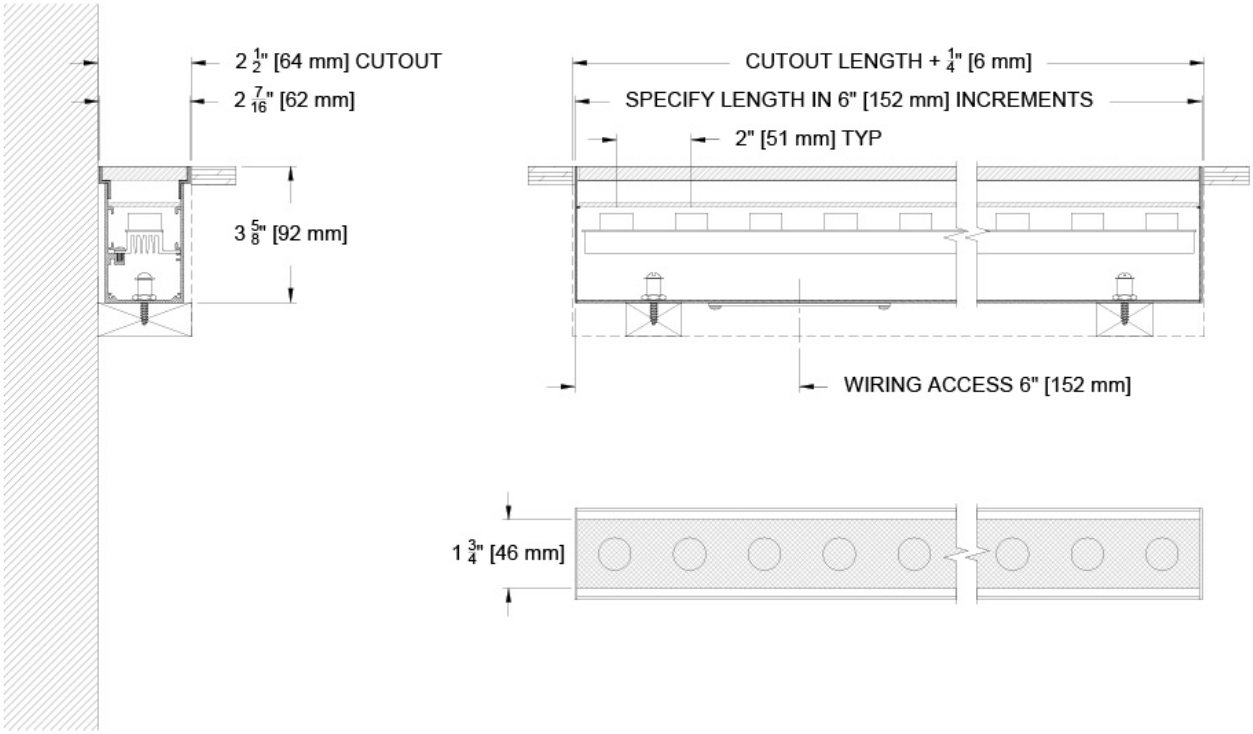

© 2026 Specialty Lighting Industries

Specialty Lighting Industries
1306 Doris Ave., Ocean, NJ 07712
Tel. 732.517.0800 | Fax 732.517.0971

Photometric Table

All data is based from goniometer measurements of production representative product. All lumen values are delivered or derived and can vary +/- 10% from LED manufacturer rated flux range. Measurements at 3000 CCT and Ambient Dim at full output. All photometry is used with a veiling acrylic (79A) lens other lens selections will modify the lumen output and exact beam spread. If photometry is required with a specific lens treatment contact your regional sales manager for a special measurement.

InRelief 2" Lensed			18° x 50°				Asymetric ISO CD Plot		
Lens Type	Source	System watts (W/ft)	Delivered Lumens (lm/ft)	Lumens/ Watt	Peak CD	10% Field	18° across width x 50° along run	CCT Multiplier	
Flush Lens (FL)	SNL8	8	462	55	724	78°	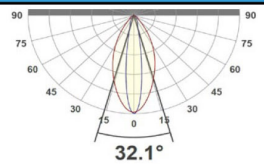	2700	0.9
	SNL11	11	608	53	953	78°		3000	1
Regress Lens (RL)	SNL8	8	454	54	733	78°		3500	1
	SNL11	11	598	52	962	78°			

© 2026 Specialty Lighting Industries
These specifications are subject to change without notice.
Specialty Lighting Industries
1306 Doris Ave., Ocean, NJ 07712
Tel. 732.517.0800 | Fax 732.517.0971

Color Data

All data is based from goniometer measurements of production representative product. All lumen values can vary +/- 10% from LED manufacturer rated data range. Measurements at 3000 CCT unless otherwise noted.

SNL8 / SNL11

Specialty Linear Board

- <3 MacAdam Ellipse (<3 SDCM)
- 90+ CRI and RF
- 60+R9, Hue Bin 1 and 16

94 CRI

72 R9

92 RF

102 RG

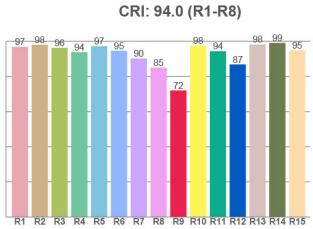

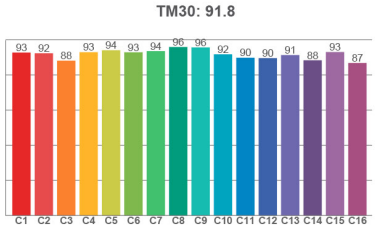

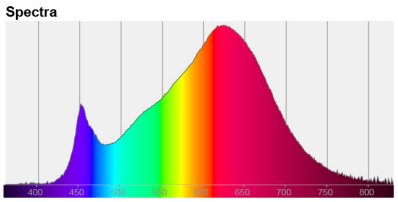

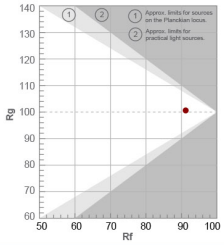

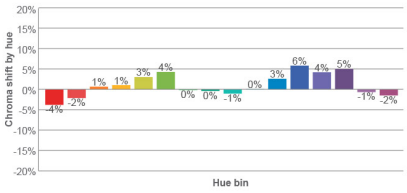

© 2026 Specialty Lighting Industries
These specifications are subject to change without notice.
Specialty Lighting Industries
1306 Doris Ave., Ocean, NJ 07712
Tel. 732.517.0800 | Fax 732.517.0971